Welcome to the gold standard in aeration

SANITAIRE GOLD SERIES MEMBRANE DIFFUSERS

SANITAIRE
a xylem brand

Interested in reducing energy consumption by 20% or more?

Aeration accounts for 35–65% of the total energy consumption at a typical wastewater treatment facility. Ensuring the lowest energy consumption is crucial to realizing real energy cost savings. That is why it pays to put your trust in the world's most reliable brand in aeration systems – Sanitaire from Xylem.

Sanitaire's new Gold Series membrane diffusers have been designed to deliver superior energy efficiency. In fact testing indicates that Gold Series diffusers can lower energy consumption by 20% over conventional fine bubble systems, and will yield even greater savings over other aeration technologies.

Sanitaire. Bubbling with exciting ideas for energy efficiency

Sanitaire is the leading brand in diffused aeration with over 40 years of experience in developing, designing and testing leading edge aeration technologies. With an installed base of over 20 million Sanitaire discs around the world, Xylem offers custom engineered aeration systems that deliver low energy costs, long-term mechanical reliability and minimal maintenance requirements.

Our vast experience, together with applications' know-how in the field and in our R&D centers, enables us to offer the most cost effective and optimized solution for each application. Our performance test center, along with our database of thousands of SOTE test measurements, allows us to keep advancing diffused aeration technology as well as providing our customers with proven, substantiated system performance.

The result? New and better ways for our customers to achieve lower energy consumption and installation costs, as well as the

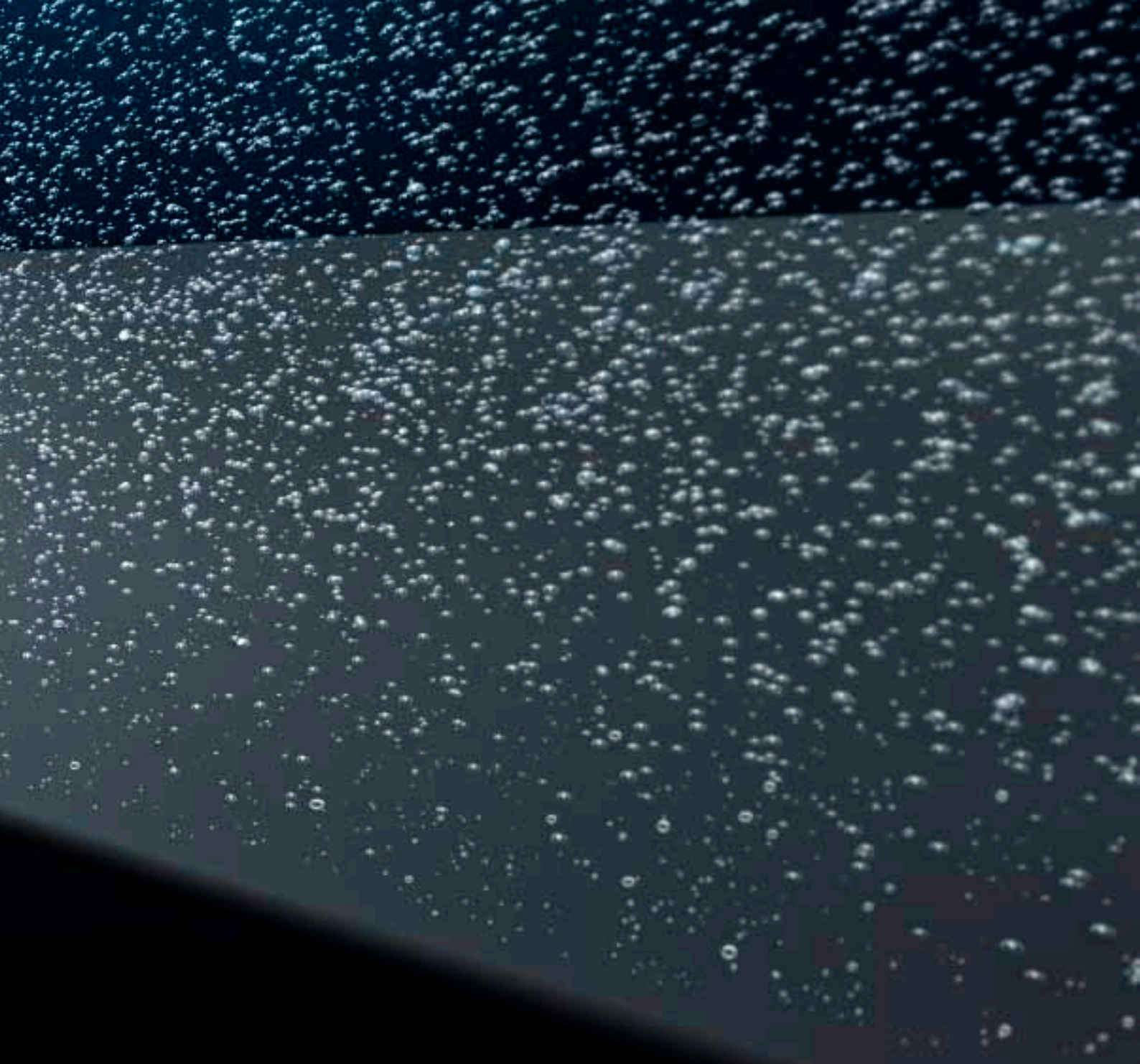

peace of mind of Sanitaire mechanical integrity and reliability, delivering years of trouble-free operation.

Time to move up to the gold standard

Sanitaire Gold Series membrane diffusers from Xylem are an advancement in aeration technology, delivering high SOTE while minimizing system headloss, for an overall superior aeration performance compared to other high efficiency aeration devices.

An outstanding feature with the Gold Series diffusers is their modular design, which facilitates installation and retrofit. The diffusers come in three lengths, making them highly flexible to suit all basin configurations. All in all, this is the gold standard in energy efficiency and reliability that you should get to know today.

Standard oxygen transfer efficiency (SOTE)
SOTE is the ratio between the amount of oxygen actually transferred and the amount delivered. Sanitaire Gold Series membrane diffusers are developed to deliver up to 60% SOTE.

Standard aeration efficiency (SAE)
SAE is the ratio between the amount of oxygen transferred to the water and the amount of energy used. Sanitaire Gold Series aeration systems have the capacity to deliver up to 8 kg O_2 /kWh. Note that SAE reflects both SOTE and blower efficiency as well as system headloss.

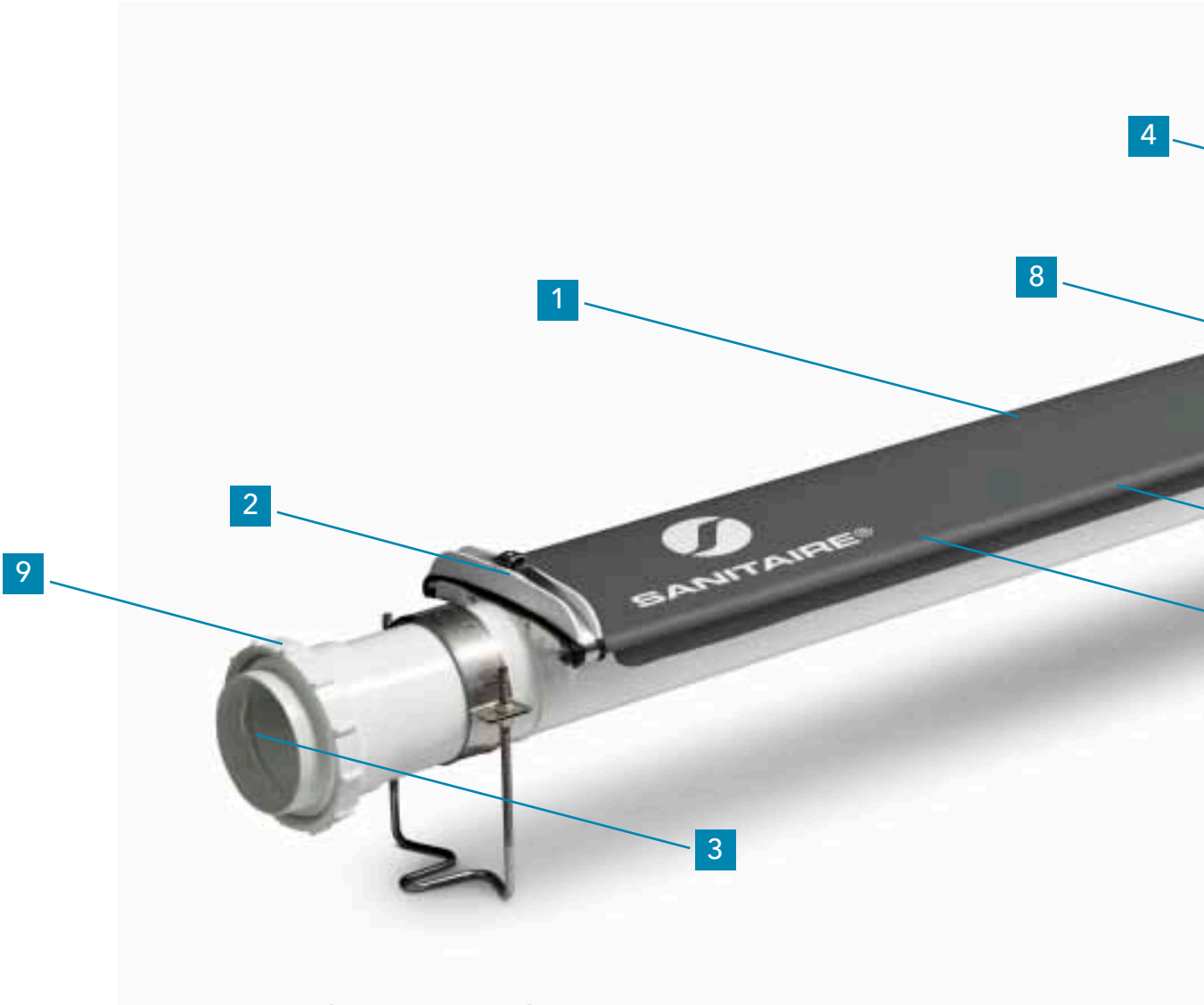

A gold mine of benefits

Through the years, we've been listening to the needs of plant operators and developing our aeration systems to provide superior, long term benefits to wastewater treatment facilities.

1 Diffuser geometry
Enables high-density configurations for greater installed surface area and low flux levels through the membrane. The combination of high density and low flux enables the highest possible oxygen transfer utilizing least possible energy.

2 End fittings and sealing system
Engineered to ensure a positive, leak proof closure. Continuous independent o-ring seated in the groove prevents excessive stress on the membrane.

3 Large diameter piping
Generously sized to minimize headlosses. Corrosion and UV resistant piping demonstrated over 20 years life in wastewater.

4 Advanced micro-punched membrane
Precision cut perforations engineered to deliver the optimum flow pattern, provide highest aeration efficiency. Air is delivered to membrane through multiple air control orifices, assuring a uniform bubble pattern from end to end.

5 Different lengths
Allows diffusers to be fitted to all basin configurations, including circular and unusual geometries.

6 Proven piping systems
Sanitaire piping systems are robust and mechanically reliable with 20 years of field life. The piping systems incorporate fixed joint couplings that ensure steadfast, long-term, trouble-free performance.

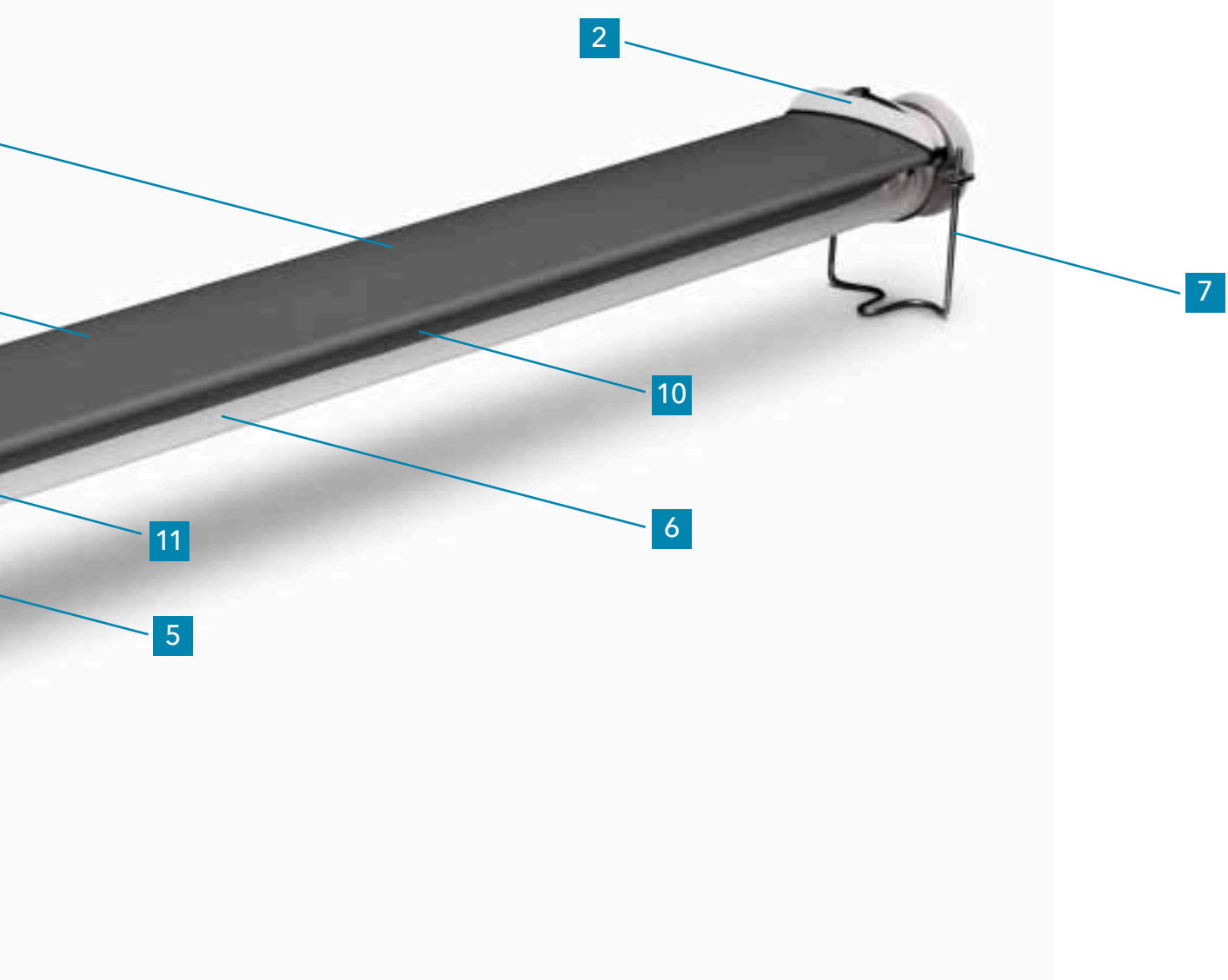

7 Adjustable supports
Single anchor bolt support for ease of installation, alignment, and removal if required. Infinitely adjustable and available in varying heights for precise leveling, even on sloped tank floors.

8 Membrane material
Aging tests demonstrate that the thicker polyurethane membrane is highly pliable and less prone to stretching. In fact it outlasts competing materials in accelerated aging tests.

9 Interchangeability
Diffuser assemblies are compatible with existing Sanitaire systems, allowing for low cost, hassle-free retrofits. Grids of the Gold Series diffusers can be combined with grids of Sanitaire disc diffusers to optimize overall aeration system performance for a treatment facility.

10 Complete unit
The Gold Series diffusers are delivered as complete, pre-assembled units, saving time and resources during installation.

11 Minimal maintenance
The system is developed to function continuously without the need for frequent air bumping or hands-on maintenance, giving operators peace of mind that the system performance will be sustained over time.

Sanitaire Gold Series membrane diffusers. Developed to set the gold standard in energy efficiency and reliability.

- Designed to slash energy consumption
- Convenient, modular and flexible
- Economical installation
- Security and peace of mind

Bubbles as good as gold for energy efficiency

Gold Series membrane diffusers are specifically developed and stringently tested to ensure that your aeration system has the highest standard aeration efficiency (SAE) possible, giving more oxygen per energy unit.

The diffusers were subjected to tests in specially equipped laboratory tanks at extreme temperatures, differing time and pressure variations, and in both clean and wastewater environments.

The results speak for themselves
Testing on the Gold Series diffusers proves that the combination of both a higher SOTE and a lower headloss through the membrane results in a higher overall standard aeration efficiency, (SAE), measured in oxygen delivered per energy unit.

Tested and proven – 20% better energy efficiency
The Gold Series was installed at a wastewater plant in The Netherlands and meticulously tested. It was found that the Gold Series delivered 20% better energy efficiency than the previous aeration disc system deployed at the plant.*

Energy consumption
Before and after istallation of Gold Series

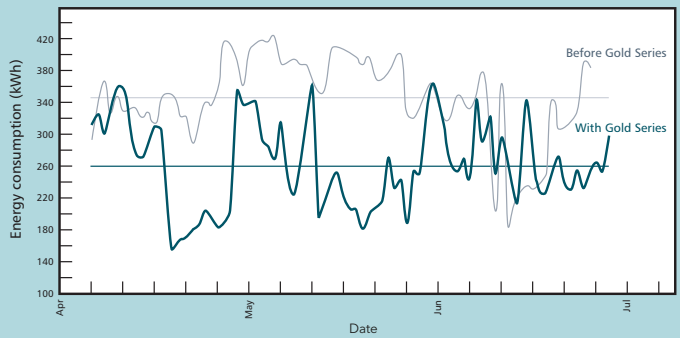

* Comparative study performed over the exact same period of time over two consecutive years. Please note that results may differ from one case to another.

Performance curves

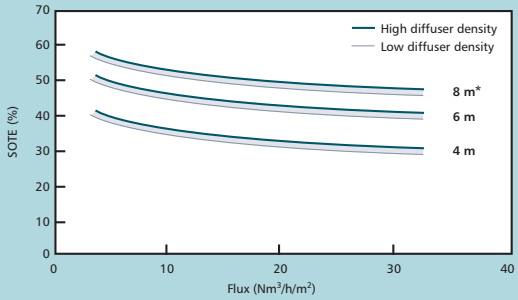

*Submergence

Technical data

Membrane material	Polyurethane
Lengths	2,286 mm, 1,500 mm, 700 mm
Airflux range	3.7–37 $Nm^3/h/m^2$
Standard oxygen transfer efficiency (SOTE)	7–10 % per m submergence
Standard aeration efficiency (SAE)	3–8 kg O_2/kWh

Achieving gold results in a wastewater treatment plant

Gold Series aeration systems take you a long way towards achieving highly efficient aeration operation in your treatment facility. Our expertise in system engineering can help you optimize the design and efficiency of the entire aeration system, with the right combination of products and technologies.

Optimal design

We make sure the grid design is based on oxygen analysis and that the right combination of Sanitaire diffusers is in place.

Pipe design

ITT can assist in the main piping design in order to minimize headlosses and reduce costs by optimizing locations of fittings and reducers. We can also recommend numerous options to effectively diffuse heat issues through heat transfer or alternate materials.

Blower sizing

The aeration system blower is another key component in efficient aeration system operation. Blower efficiency is not the only consideration, but proper sizing, redundancy, turndown ratios, and accessories all contribute to optimizing aeration system performance at all design conditions.

Controls

In order to achieve efficient transfer of oxygen while minimizing energy consumption, an effectively designed D.O. control system from Xylem can direct the blowers to deliver the required air flow rates exactly where needed in the aeration basins.

The mark of a leader

As the world leader in diffused aeration and advanced biological treatment technologies, Sanitaire equipment and technologies are the industry standard, to be found in communities and industries the world over. Now the Gold Series aeration system delivers the assurance of the very same high quality solutions all the way.

Talk to us, get to know our complete range of aeration solutions – from blowers to diffusers and monitoring and control equipment – and rest assured we'll provide the right aeration technology, system design and installation for any and every wastewater treatment plant requirement.

Xylem [ˈzīləm]

1) The tissue in plants that brings water upward from the roots
2) A leading global water technology company

We're 12,000 people unified in a common purpose: creating innovative solutions to meet our world's water needs. Developing new technologies that will improve the way water is used, conserved, and re-used in the future is central to our work. We move, treat, analyze, and return water to the environment, and we help people use water efficiently, in their homes, buildings, factories and farms. In more than 150 countries, we have strong, long-standing relationships with customers who know us for our powerful combination of leading product brands and applications expertise, backed by a legacy of innovation.

For more information on how Xylem can help you, go to xyleminc.com.

xylem
Let's Solve Water

Sanitaire is a brand of Xylem. For the latest version of this document and more information about Sanitaire products visit **www.sanitaire.com**

1142 . Welcome to the gold standard in aeration . 1 . Master . 1 . 20111019